Soter

Horizontal Safety Line System

- Roofing Contractor
- Architect
- Designer
- Building Owner
- Contractor

QBM

What's on offer

Roofer

- Nobody knows & cares for your roof like you do
- Include the Soter Safety Line System in your package
- Have a single point responsibility and extra revenue

Architect / Designer

- Not just a line on a drawing
- Design a safe and practical system
- Free RIBA approved CPD seminar
- Keep up to date with current HSE legislation

Specifier

- Save lives by specifying the right products
- Understand what can be specified and policed
- How to ensure you get what you specified

Client / Building Owner

- Protect against and understand corporate manslaughter
- Provide a simple and practical roof access facility
- Allows low cost future roof maintenance
- Peace of mind that you provide user protection and comply with HSE

QBM Support

- Full design responsibility and proof calculations
- Technical assistance and consultations
- Testing on bespoke substrates
- Re-certification and full life system maintenance

Main Contractor

- Appreciation and understanding of current legislation
- Free QBM consulting and problem solving
- Peace of mind with total HSE compliance

Soter is designed to appeal to all parties who come into contact with Horizontal Life Lines, from designers right through to the user.

QBM have over 50 years experience in the roofing industry. We "understand" roof substrates, how they have changed over the years and how this has fundamentally changed the methods of attaching to them.

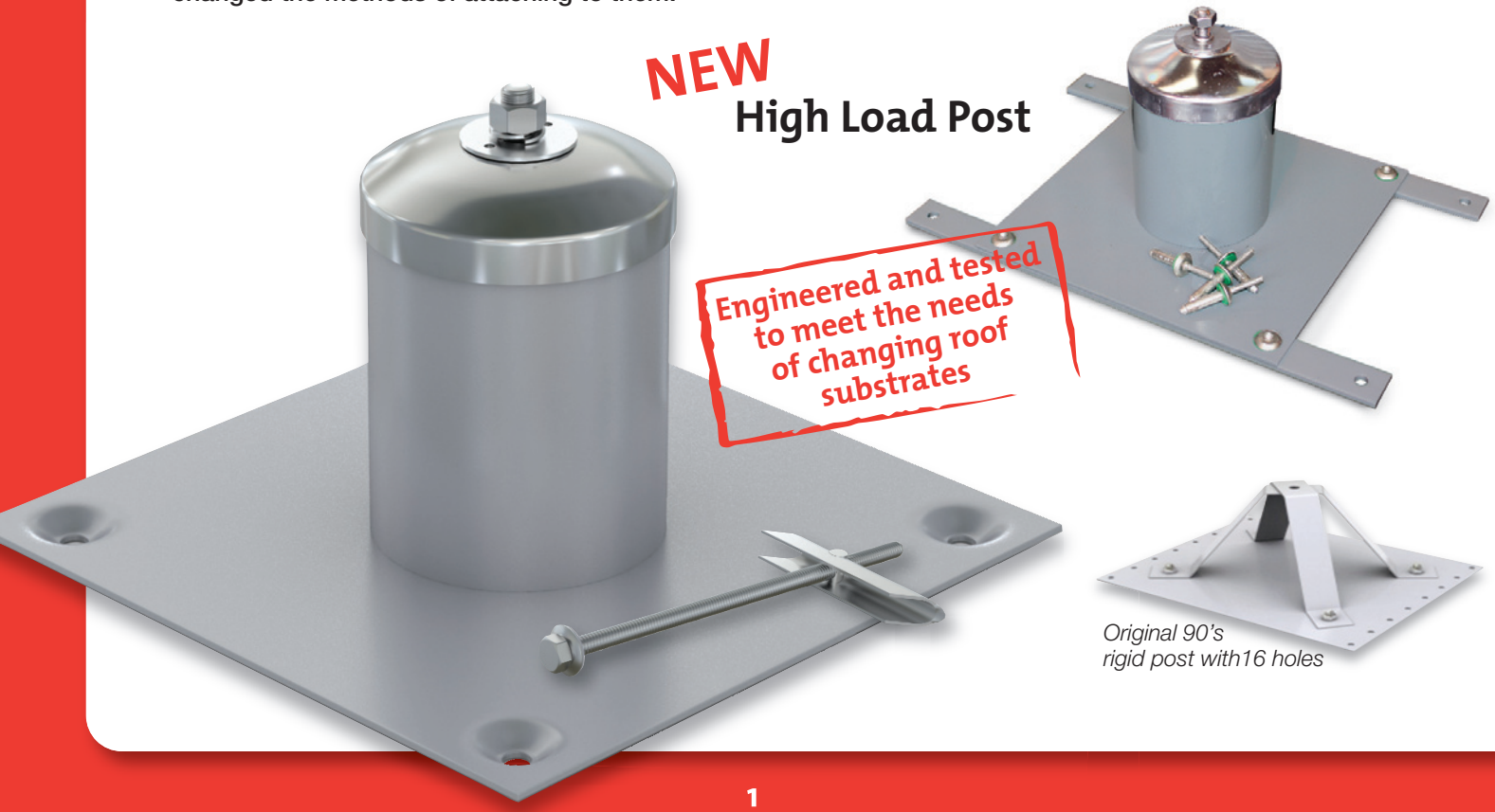

Legislation

‘Hierarchy of Fall Protection’

‘avoid work at height wherever possible’ is well known HSE guidance, however where this is not possible, we are all responsible for minimising the risks. When roof access can not be avoided **ALL** current guidance dictates that a ‘work restraint system’ is the best option.

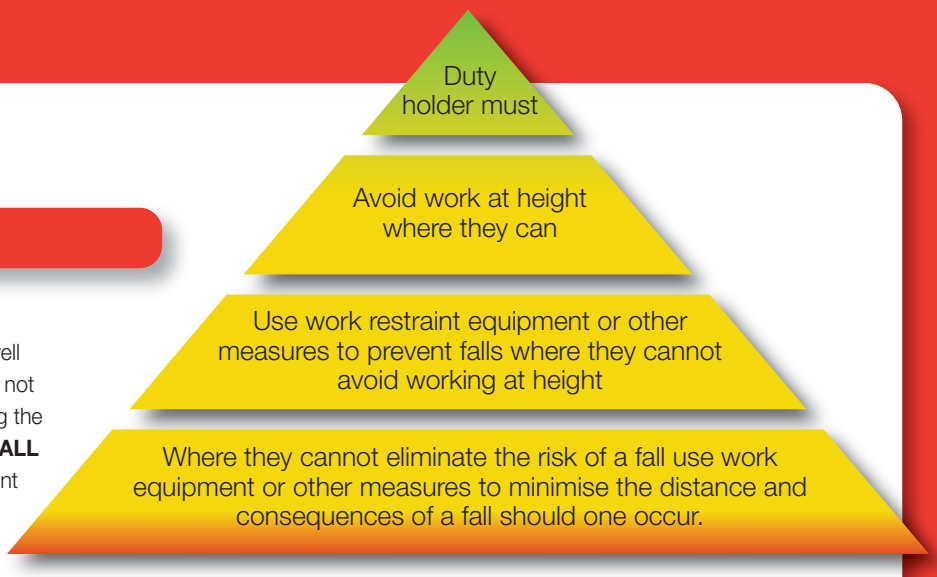

Testing

QBM have in house testing facilities, our system tests pass EN795 and the recently published ‘Magenta’ guide lines from the ‘Advisory Committee for Roofwork’ ACR[M]002:2009-(Part2) Testing of Roof Anchors on Roof Systems

QBM have successfully performed compliant drop tests on sheets down to 0.4mm thick steel.

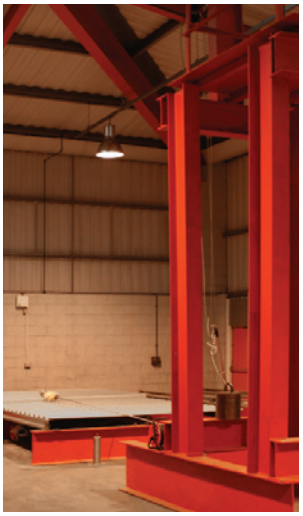

Restraint or arrest - what’s the difference?

Work Restraint System: No possibility of a fall

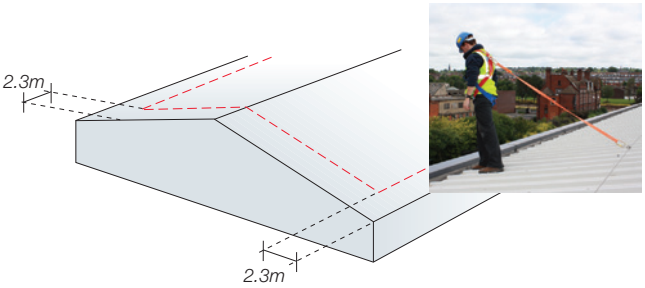

A typical restraint system would have a lifeline running around the perimeter of the building, 2.3m back from any potential fall.
This would allow for gutter cleaning and maintenance (the most common reason roof access is required).

This type of system requires the minimum of PPE training.

Fall Arrest: Risk of a fall

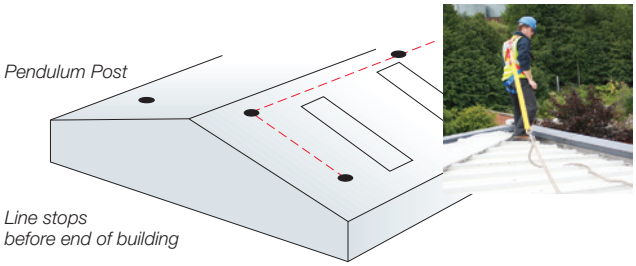

A fall arrest system requires more input from a design point of view and should always be backed up with published calculations applicable to the roof substrate type.

This type of system can require extensive PPE & system training.

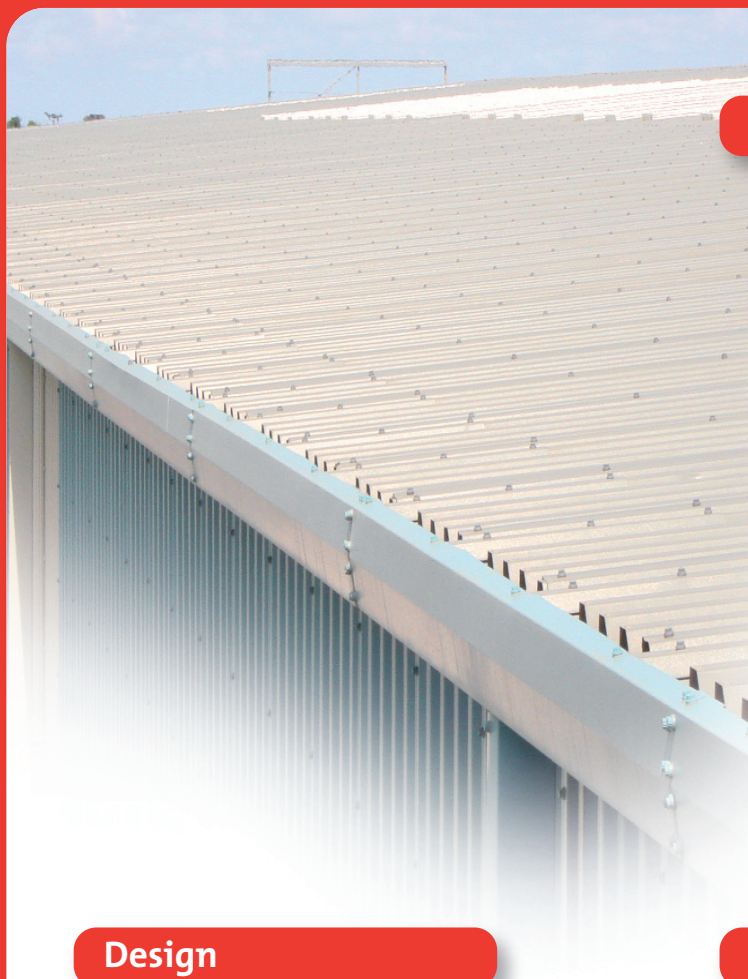

Evolving Needs

Over the last 30 years the industry has gradually moved away from fixing rigid support posts through the roof construction back to the main structural purlins. These were typically fixed back to the structural steelwork, where 10m spacings were permissible. After years of thermal movement, the external roof seals becomes seriously challenged.

This move away from rigid 'through fix' posts towards more flexible and more faller friendly components has effectively ended the era of 'standard' post spacing and simplistic, uncalculated and non scientific designs.

Nowadays, modern support posts are mounted on a variety of outer skin roof substrates and thicknesses, therefore it also follows that the functionality and protection afforded to the user should reflect this.

A system's components should be tailored to the individual roof build up. Extreme danger could lie within a safety line system whose untested shock loads are capable of detaching the outer roof skin!

20 years of weathering & repairs

View from underside

Design

Merely asking for a safety line, abdicates design responsibility. In order to establish the requirement of a bespoke Horizontal Life Line, the need to access the roof must be clearly understood e.g.

- **Gutter cleaning & maintenance**
- **Access to air conditioning units**
- **Roof-light cleaning**
- **Plant & machinery**
- **Solar or Photovoltaic panel maintenance**
- **Green Roof maintenance**

Whatever the design factors that are taken into consideration, the first option should always be to design the system to restraint.

Before design can start we must fully understand the need's of the system. The following factors should be typically considered:

- **Roof material**
- **Access point**
- **Building height**
- **Roof lights**
- **Number of Users**

Testing and Calculations

QBM's Soter range has been tested to BS EN795 & The Advisory Committee for Roof Work's latest publication the 'Magenta' guide to testing.

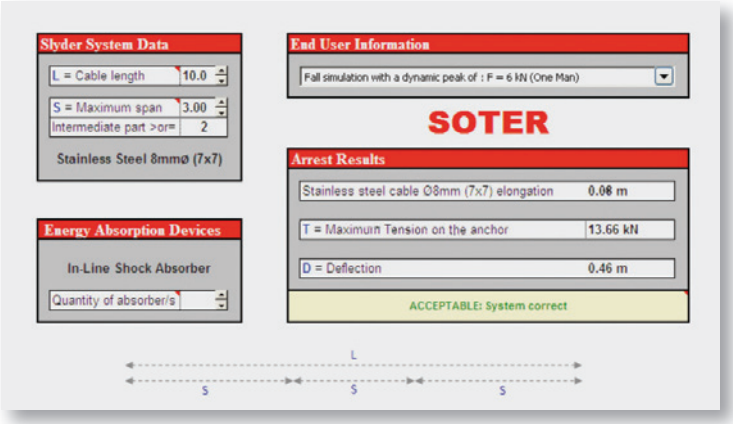

Results from all of these tests have been independently accredited to produce our comprehensive calculations program. It is simple to use and can determine optimum post spacing to meet the end load performance that varies so much with differing roof types. Some of the substrates tested include Aluminium standing seam, composite panels (with topskins down to 0.4mm), double skin and twin skin 0.7mm along with metal, timber and concrete decks.

Product Innovation

QBM have over 2 generations of experience supplying & installing fasteners, and know how they perform!

Exhaustive tests have proven that the stitching screws can be prone to stripping from thin outer sheets, some may never get close to their designed 'pull out' performance.

Fastener performance is governed by:

- **Drill point geometry vs. thread diameter**
- **Which substrate they are installed into**
- **How they are installed**

The new SOTER Posts have only 4 structural rivets penetrating the outer sheet.
Less drilling means greater air tightness!

TYPICAL VALUES			
Fastener	Substrate	Shear	Tension (pull-out)
5.5 dia	2x0.7	0.9kn	0.5kn
6.3 dia	2x0.7	1.7kn	1.4kn
7.9 dia Bulb Tite Rivet	2x0.7	2.05kn	**2.9kn** up to 6 x stronger

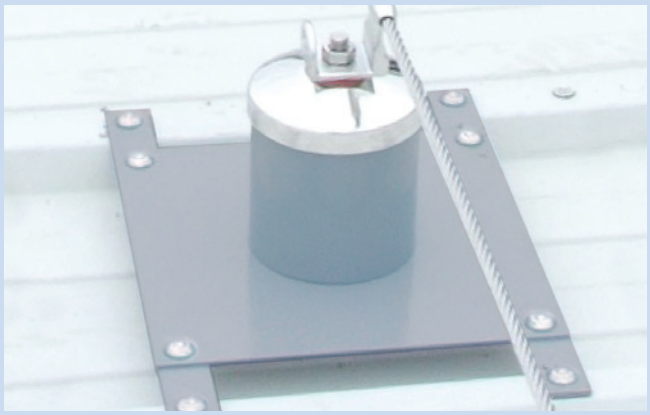

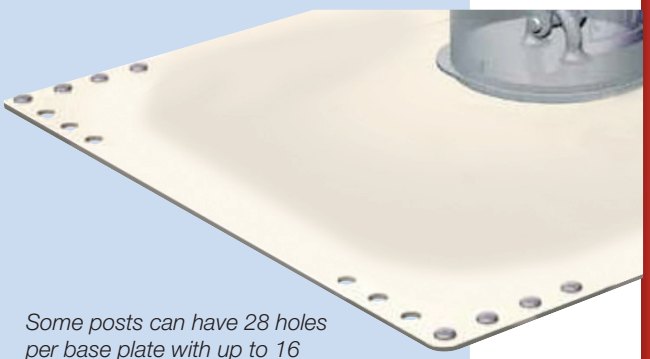

Some posts can have 28 holes per base plate with up to 16 potential fastener leak points!

Soter Innovation - keeping it simple

Intermediate brackets feature additional attachment points to allow operatives to pass on the system

The Slyder personal attachment device, allows access & egress anywhere on the line. Glides smoothly around the system and across all other components

Adjustable Corner unit and tube, from 45° to 179°

Universal End Anchor - facilitates crossing of line without the need for detachment and reattachment

'Green Roof' post - available in different heights to ensure line is clear of various growing, mediums and not a trip hazard.

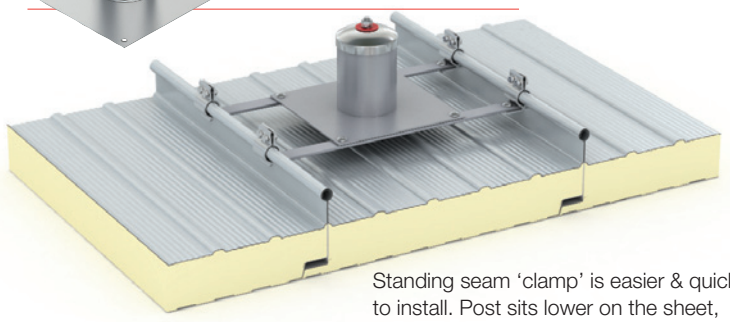

Standing seam 'clamp' is easier & quicker to install. Post sits lower on the sheet, reducing pull off load on to the outer sheet

Specifier

QBM provide a 45min RIBA approved presentation.

The CPD has been produced with Architects & Designers in mind. It features:

- **An understanding of the current HSE & CDM regulations**
- **What to specify and why**
- **Hierarchy of safety design considerations**
- **How and why many systems fail to meet these regulations**
- **Importance of calculations**
- **Warranties**

After attending a CPD, the participants will be able to better assess and understand the relevant criteria and system requirements, along with with the overall suitability of an arrest or restraint system design.

Project Design & Specification

QBM cover the whole country and can assist with any design & specification at the office or even on site.

- **Site installation and training**
- **New build or refurbishment**
- **Office design and specification**

Typical Design Considerations

- **What is the intended use of the system?**
- **Arrest or restraint?**
- **What's the roof substrate and can it take the loads?**
- **Has it been calculated?**
- **What's the building height?**
- **How will the system be accessed?**
- **Rooflights - when should lights be considered 'fragile'?**

Roofing Contractor / Installer

When you include Soter within your roofing package you get greater control of project completion times.

Training is FREE, our own training team will guide your chosen personnel through the installation process.

We will accompany you until sufficient competence and confidence levels are attained.

We can certify the installed system on your behalf, QBM can then take responsibility for the system.

Extra revenue streams can be gained by trained installers when they re-certify systems - every 12 months or QBM can take on the responsibility.

QBM Installation

We offer the facility to quote and install, taking full design and re-certification responsibility for the whole life of the system.

Continued Development

Substrate types and changing regulations drives continuous and regular product development and testing.

Our in house testing facilities meet all current requirements laid down by BS EN795 & The Advisory Committee for Roof Work's latest publication the 'Magenta' guide to testing Horizontal Life Lines.

QBM's development engineers respond quickly to the changing needs of OEMs and industry regulations.

The Rosebowl, Southampton

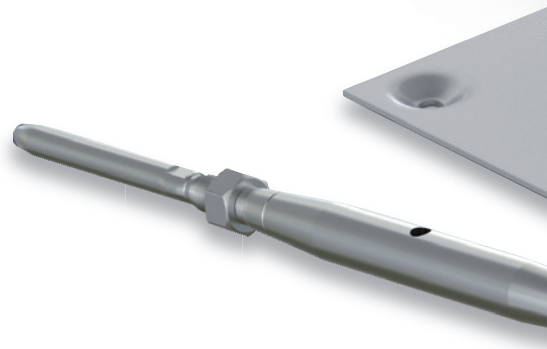

QBM Distributors Ltd
Gelderd Road
Birstall
Batley
West Yorkshire
WF17 9QD

T: 01924 472 251
F: 01924 440 237

E: sales@qbmdistributors.co.uk
W: www.qbmdistributors.co.uk